MECHANICAL VENTILATION UNITS SCHEDULE									
TAG:	LOCATION:	SERVICE:	SUPPLIER:	MANUFACTURER:	MODEL:	FLOW M³/Hr	POWER (W)	VOLTAGE	NOTE
EF-01	STORE AT ROOM 28	SCIENCE LAB 1 STORE EXTRACT VENTILATION	IRISH VENT	ROSENBERG	RS 100L.2CA	280	28	230V 1PH 50Hz	CW/ TIME CLOCK, GRILLES & ACCESSORIES
EF-02	STORE AT ROOM 28	SCIENCE LAB 1 FUME CUPBOARD VENTILATION	CSC	CSC	CSC 200	1440	1100	230V 1PH 50Hz	C/W METAL PEDESTAL, CONTROLS & ACCESSORIES
EF-03	STORE AT ROOM 26	SCIENCE LAB 2 STORE EXTRACT VENTILATION	IRISH VENT	ROSENBERG	RS 100L.2CA	280	28	230V 1PH 50Hz	CW/ TIME CLOCK, GRILLES & ACCESSORIES
EF-04	STORE AT ROOM 26	SCIENCE LAB 2 FUME CUPBOARD VENTILATION	CSC	CSC	CSC 200	1440	1100	230V 1PH 50Hz	C/W METAL PEDESTAL, CONTROLS & ACCESSORIES
EF-05	STORE AT ROOM 14	SCIENCE LAB 3 STORE EXTRACT VENTILATION	IRISH VENT	ROSENBERG	RS 100L.2CA	280	28	230V 1PH 50Hz	CW/ TIME CLOCK, GRILLES & ACCESSORIES
EF-06	ROOF	SCIENCE LAB 3 FUME CUPBOARD VENTILATION	CSC	CSC	CSC 200	1440	1100	230V 1PH 50Hz	C/W METAL PEDESTAL, CONTROLS & ACCESSORIES

HEAT EXCHANGE UNIT SCHEDULE								
TAG:	LOCATION:	SERVICE:	SUPPLIER:	MODEL:	FLOW M³/Hr	POWER (kW)	VOLTAGE	NOTE
HE-01	SCIENCE LABORATORY No.1 - ROOM 28	MECHANICAL HEAT RECOVERY VENTILATION	AIRMASTER	AM1000-VV-BB	1050	0.3	230V SINGLE PHASE	C/W CO2 SENSOR, AIRLINQ ORBIT CONTROLLER & GRILLES
HE-02	SCIENCE LABORATORY No.2 - ROOM 26	MECHANICAL HEAT RECOVERY VENTILATION	AIRMASTER	AM1000-VV-BB	1050	0.3	230V SINGLE PHASE	C/W CO2 SENSOR, AIRLINQ ORBIT CONTROLLER & GRILLES
HE-03	SCIENCE LABORATORY No.4 - ROOM 14	MECHANICAL HEAT RECOVERY VENTILATION	AIRMASTER	AM1000-S1S2-BB	1050	0.3	230V SINGLE PHASE	C/W CO2 SENSOR, AIRLINQ ORBIT CONTROLLER & GRILLES

ROOF TERMINATIONS SCHEDULE					
TAG	MANUFACTURER	TYPE	SERIES / SIZE	SPIGOT DIAMETER	NOTE
RT-1	VENT AXIA	T-SERIES	T SERIES SIZE 12	400mm	FRESH AIR INTAKE
RT-2	VENT AXIA	T-SERIES	T SERIES SIZE 12	400mm	EXHAUST AIR

FIRE DAMPER SCHEDULE				
TAG:	MANUFACTURER	TYPE	SIZE	NOTE
FD	LINDAB	FIRE DAMPER WH25	TO MATCH DUCT	1 HOUR FIRE AND SMOKE DAMPER

MAKE UP AIR WALL VENTILATOR SCHEDULE:				
TAG	MANUFACTURER	MODEL	VENTILATION FREE AREA	NOTES
WV1	ICON	ICV123 / 150 ADJUSTABLE CORE WALL VENT KIT & EXTERNAL LOUVRE GRILLE ICV 275 IN BLACK	11,440mm²	C/W EXTERNAL LOUVRE GRILLE WITH FLYSCREEN IN BLACK ICON ICV 275

B MV-02 VENTILATION EQUIPMENT SCHEDULE
SCALE:- NTS

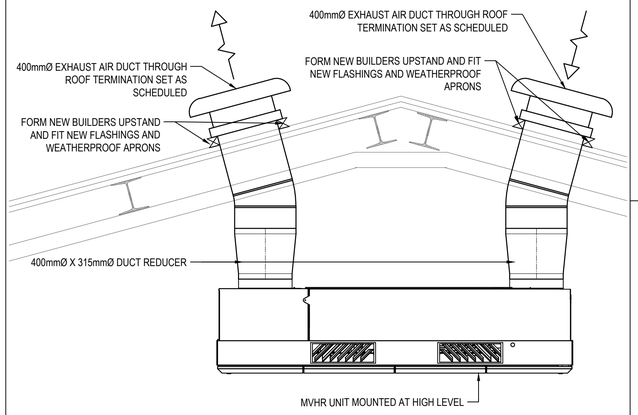

C MV-02 NEW VENTILATION UNIT DETAIL
SCALE:- NTS

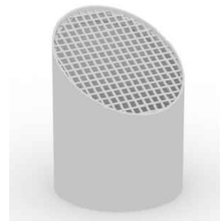

E MV-02 EXTRACT FAN BIRD MESH DETAIL
SCALE:- NTS

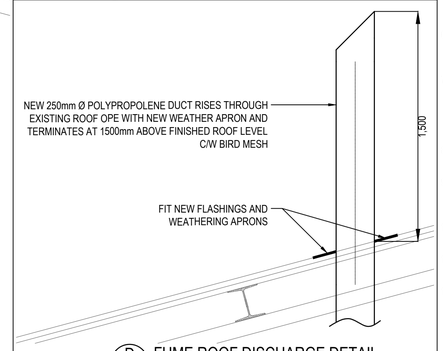

D MV-02 FUME ROOF DISCHARGE DETAIL
SCALE:- NTS

© Fahey O'Riordan Consulting Engineering Ltd
This drawing and design is Copyright of Fahey O'Riordan Consulting Engineering Ltd and must not be reproduced without their written consent. The drawing remains the property of the consultants.

NOTES:

1. THIS DRAWING IS INDICATIVE ONLY AND SHALL BE READ IN CONJUNCTION WITH THE SPECIFICATION & ALL OTHER RELEVANT DRAWINGS
2. THIS DRAWING MUST NOT BE SCALED. WORK TO THE FIGURED & SITE OBTAINED DIMENSIONS ONLY.
3. CONTRACTOR SHALL TAKE FULL COGNISANCE OF THE PRELIMINARY HEALTH AND SAFETY PLAN, AND PROVIDE FULL METHOD STATEMENTS FOR ALL HAZARDOUS OPERATIONS LISTED THEREIN. METHOD STATEMENTS SHALL ALSO BE PROVIDED FOR ANY HAZARDOUS OPERATION WHICH BECOMES APPARENT THROUGHOUT THE CONSTRUCTION PHASE.
4. THE MAIN CONTRACTOR WITH RELEVANT SPECIALIST SUB CONTRACTORS SHALL VISIT THE SITE TO DETERMINE THE FULL EXTENT OF THE WORKS PRIOR TO SUBMITTING COMPLETED TENDERS, TO ENSURE ALL COSTS ARE INCLUDED. NO COSTS FOR UNFORESEEN WORK DUE TO LACK OF SITE KNOWLEDGE WILL BE ACCEPTED.
5. THE MAIN CONTRACTOR IS RESPONSIBLE FOR SETTING OUT AND SUPERVISING ALL BUILDERS WORKS AS SPECIFIED IN THE TENDER DOCUMENTS. ALL NECESSARY BUILDERS WORKS SHALL BE COMPLETED BY THE BUILDING SUB-CONTRACTOR DOMESTIC TO THE MAIN CONTRACTOR
6. THE MAIN SERVICES CONTRACTOR IS FULLY RESPONSIBLE FOR ON SITE CO-ORDINATION WITH SPECIALIST SUB CONTRACTORS, BUILDING WORKS SUB CONTRACTOR AND ALL OTHER TRADES.
7. THE MECHANICAL SUB CONTRACTOR SHALL BE RESPONSIBLE FOR COORDINATING THE NEW MECHANICAL SERVICES SO AS TO ENSURE A NEAT AND FULLY ACCESSIBLE INSTALLATION WITH MINIMAL DISRUPTION TO THE BUILDING AND OTHER EXISTING SERVICES WHICH MUST BE RETAINED IN "AS IS" CONDITION.
8. WHERE A PARTICULAR MANUFACTURERS PRODUCTS ARE SPECIFIED IT SHALL BE READ AS EQUAL AND PRE-APPROVED BY THE ENGINEER.
9. DUCTWORK SHALL BE INSTALLED TO AIR TIGHTNESS LEVELS COMPLIANT WITH HVCA DW/143 DOCUMENT 'A PRACTICAL GUIDE TO DUCTWORK LEAKAGE TESTING'.
10. EXTRACT VALVE LOCATIONS SHALL BE COORDINATED ON SITE WITH LIGHT FITTINGS AND CEILING JOIST LAYOUT.
11. ALL DUCTWORK WILL BE INSULATED WITH FOILED BACK INSULATION TO ELIMINATE THE RISK OF CONDENSATION.
12. ON COMPLETION OF THE INSTALLATION, ALL SYSTEMS SHALL BE TESTED AND COMMISSIONED AND DEMONSTRATED TO THE ENGINEER/CLIENT TO ENSURE THAT IT IS OPERATING ACCORDING TO THE DESIGN REQUIREMENTS.

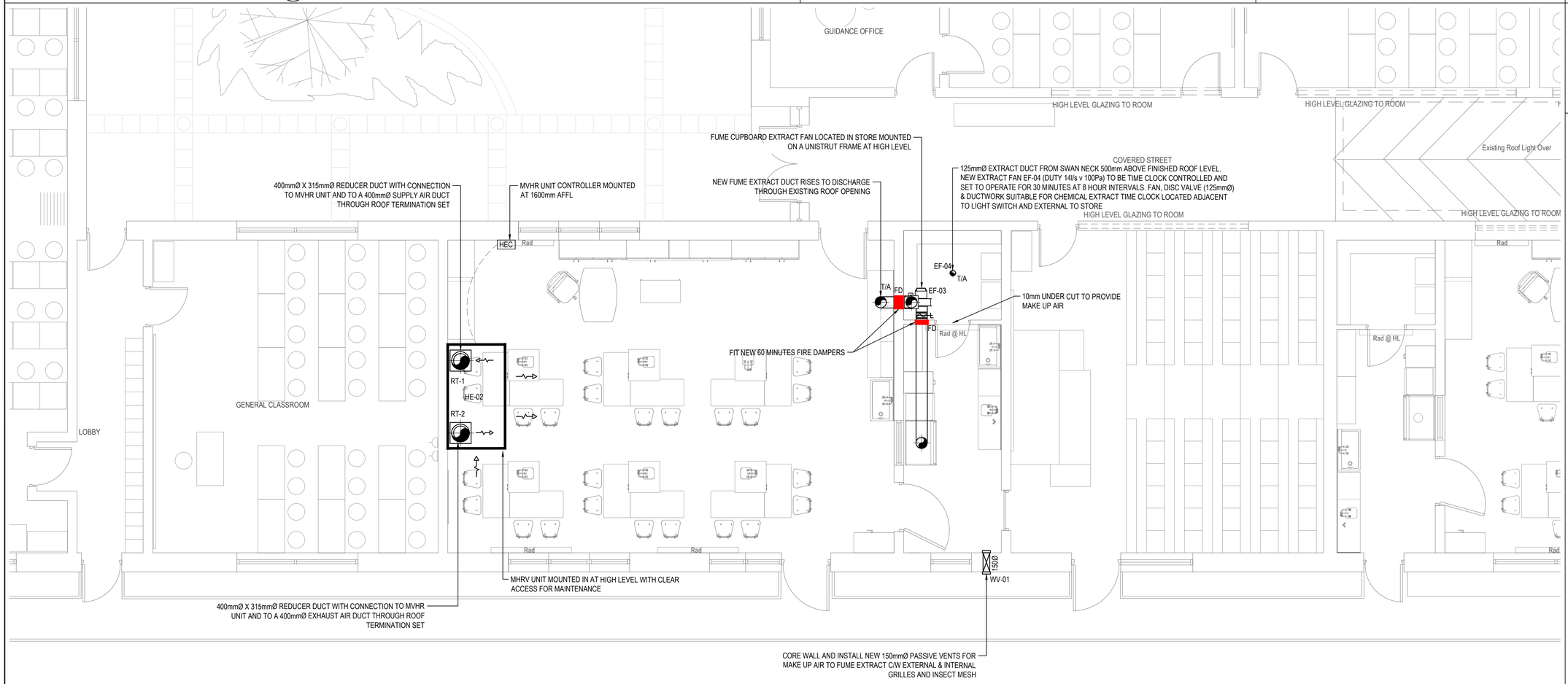

A MV-02 PROPOSED VENTILATION SERVICES LAYOUT
SCALE:- 1:50

VENTILATION LEGEND OF SYMBOLS & ANNOTATIONS:

HE-	DENOTES HEAT RECOVERY UNIT AS SCHEDULED
EF-	DENOTES EXTRACT FAN AS SCHEDULED
HEC	DENOTES HEAT RECOVERY UNIT CONTROLLER
FD	DENOTES FIRE & SMOKE DAMPER

REV	DESCRIPTION	BY	CHK	APP	DATE
T2	REVISED TENDER ISSUE	LL	JF	JF	24/09/26
T1	REVISED TENDER ISSUE	LL	JF	JF	22/05/26

CLIENT:
LIMERICK AND CLARE EDUCATION AND TRAINING BOARD
CAPITAL PROCUREMENT SECTION
STATION ROAD, ENNIS, CO CLARE

SCHOOL:
COLÁISTE MHUIRE ASKEATON
CHURCH STREET, ASKEATON, Co. LIMERICK

Fahey O'Riordan Consulting Engineers
SHANACLOGH, CAPPAWHITE, Co. TIPPERARY.
TEL: +353 (0) 62 75929
EMAIL: info@force.ie
WEB: www.force.ie

Project:
COLÁISTE MHUIRE ASKEATON SCIENCE LABS UPGRADE
CLIMATE ACTION SUMMER WORKS 2026 PROJECT

Drawing Title:
PROPOSED VENTILATION SERVICES LAYOUT & DETAILS
SCIENCE LABORATORY no.2

Scale	Drawn	Checked	Approved	Date
1:50 @ A1	LL	JF	JF	24/04/2026

Project No.	Type	Drawing No.	Revision
2621	M	2621-MV-02	T2

APPROVAL☐ INFORMATION☐ TENDER☒ CONTRACT☐ CONSTRUCTION☐